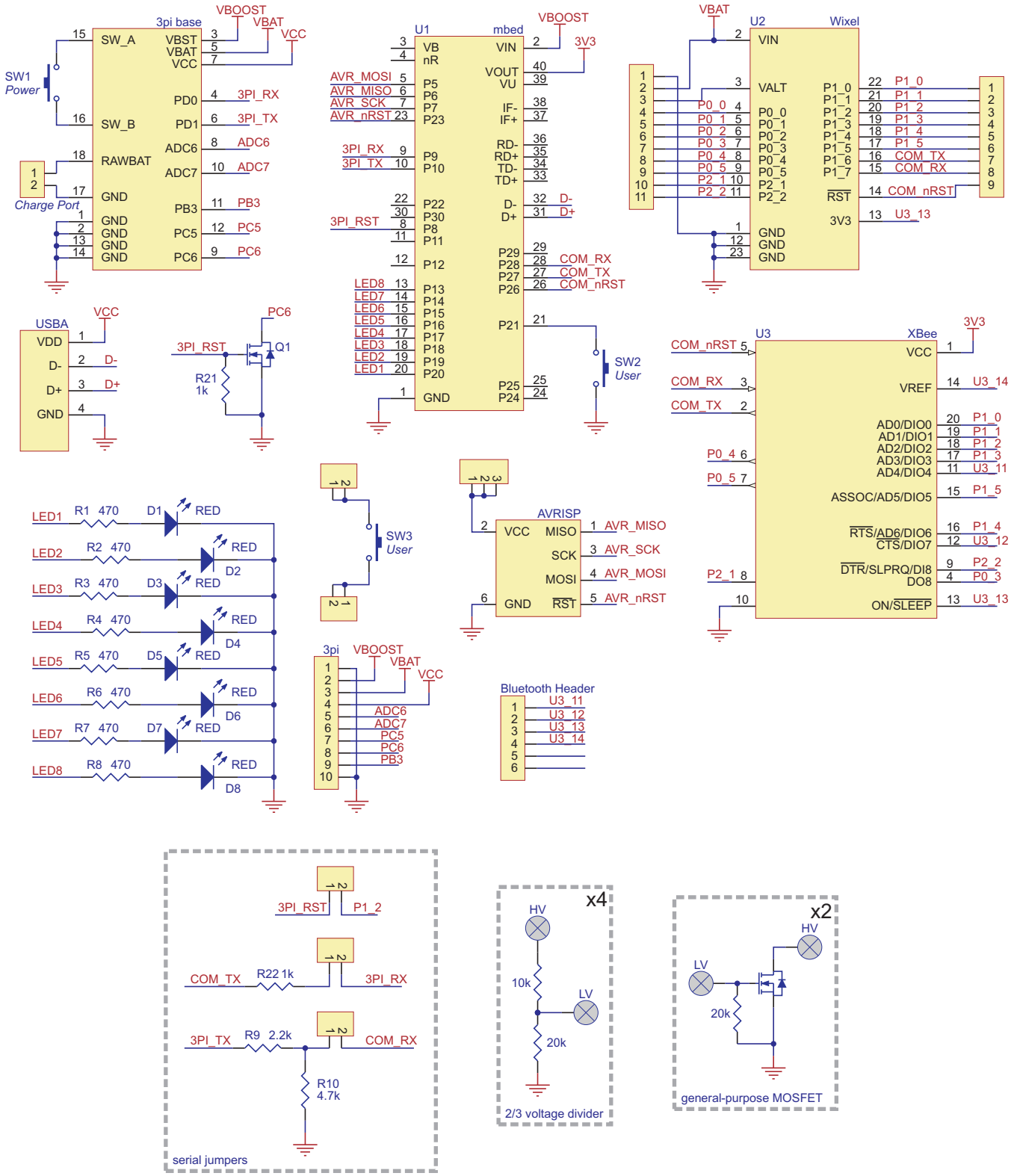Pololu m3pi Expansion PCB Schematic