DRV8880 Stepper Motor Driver Carrier
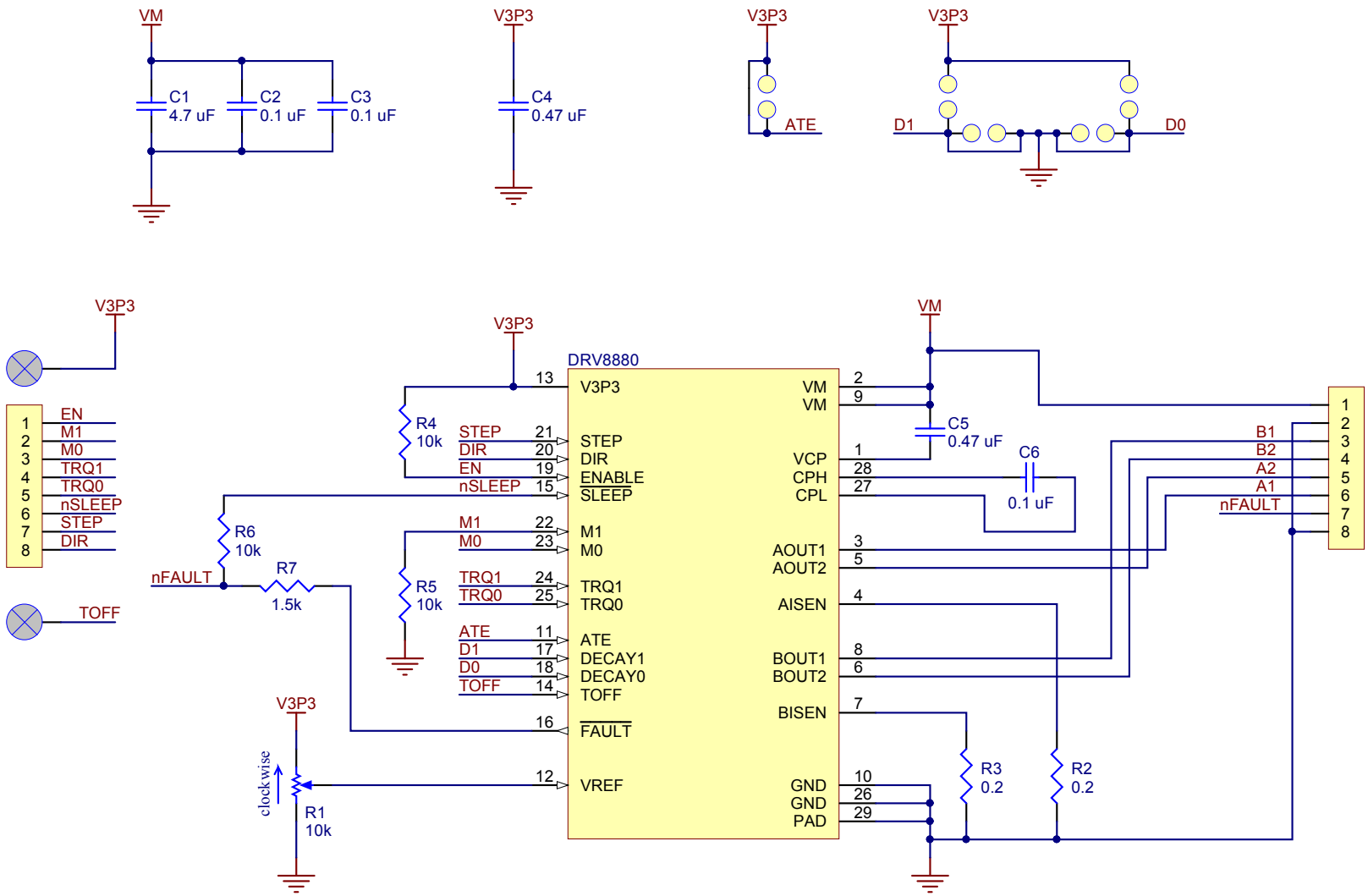
©2016 Pololu Corporation
www.pololu.com