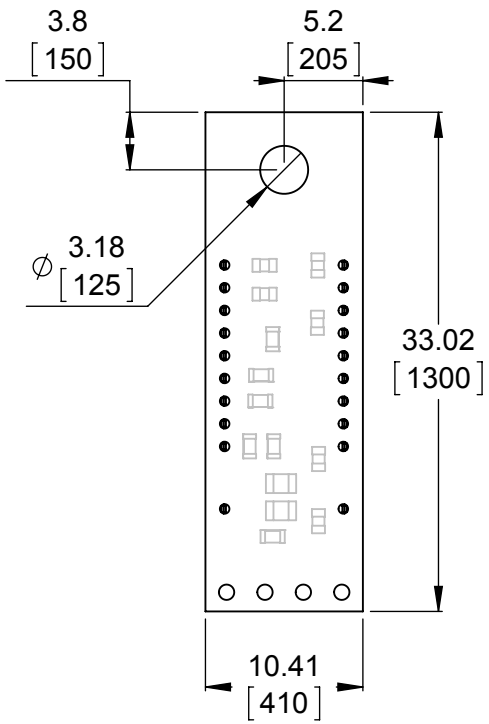

1 Board dimensions

Scale 2:1

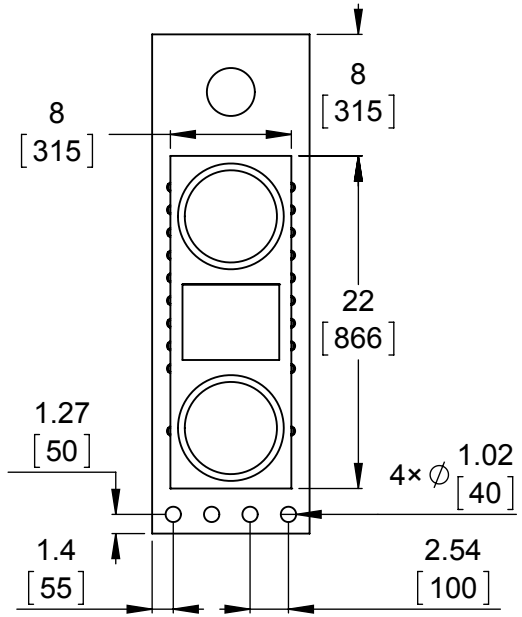

2 Connector callouts

Scale 2:1

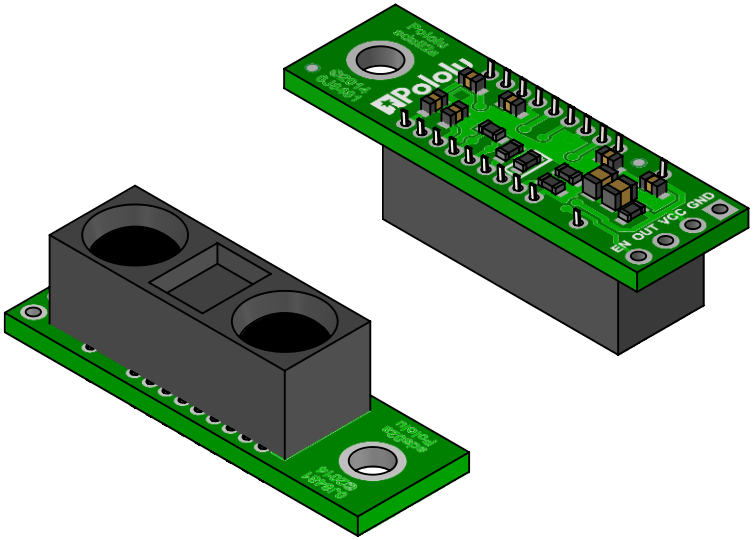

3 Isometric view

Scale 2:1

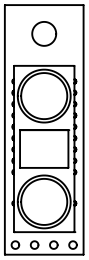

5 Actual size

Scale 1:1

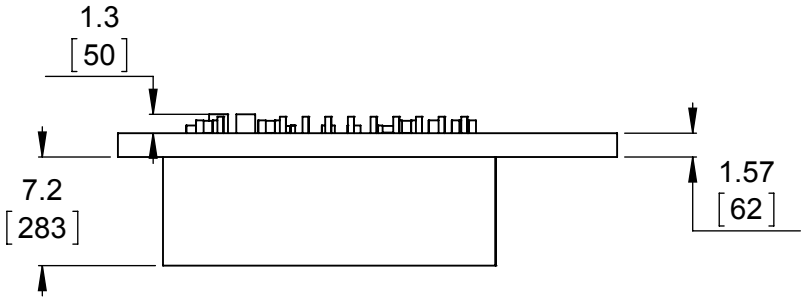

4 Profile

Scale 2:1

1. To get the specified scale, select 100% in print settings.
2. Drill location tolerance: ±0.1 [±5].
3. Board edge tolerance: ±0.3 [±10].

http://www.pololu.com/product/2474

Name: Pololu Carrier with Sharp GP2Y0A60SZLF Analog Distance Sensor 10-150cm	Item number: 2474, 2476
Drawing date: 23 September 2014	Pololu Robotics & Electronics
Units: mm [mil] / PCB dev code: sds02a	© 2014 Pololu Corporation