Zumo 32U4 OLED

Pinout and peripherals

Top expansion

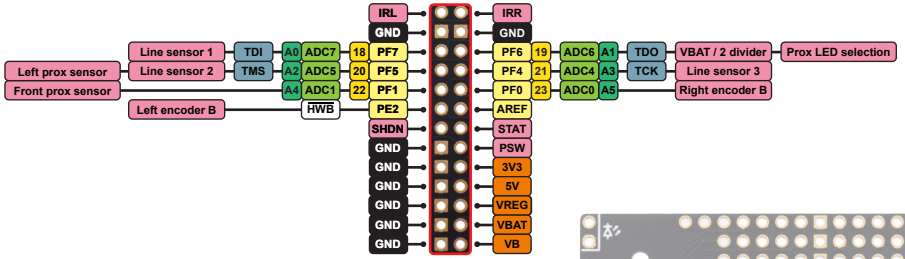

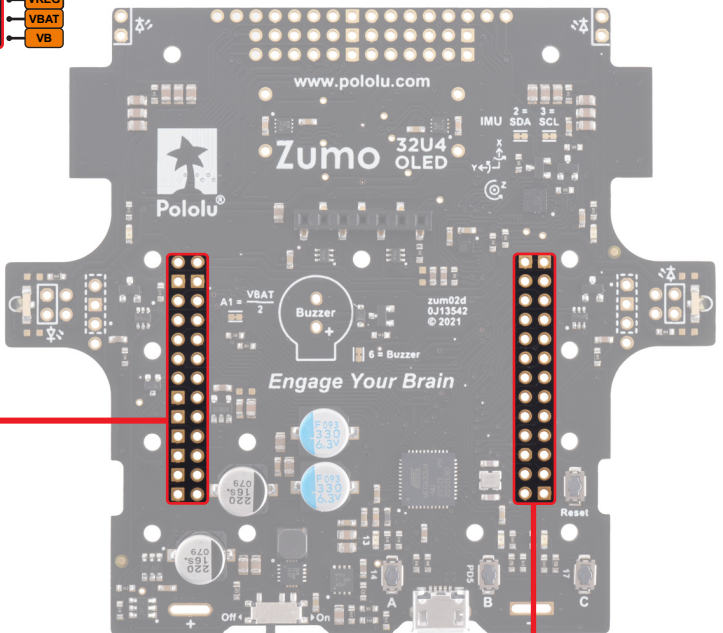

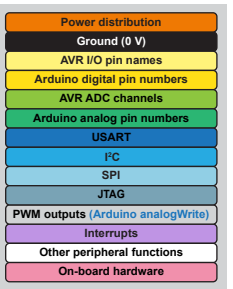

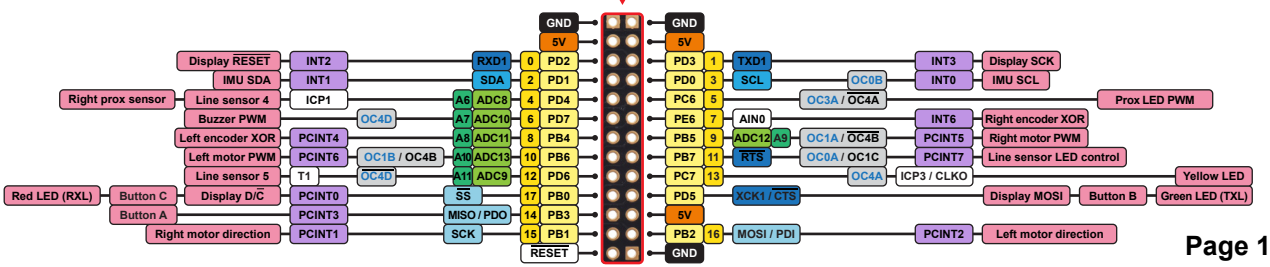

Pololu

Zumo 32U4 OLED

Pinout and peripherals
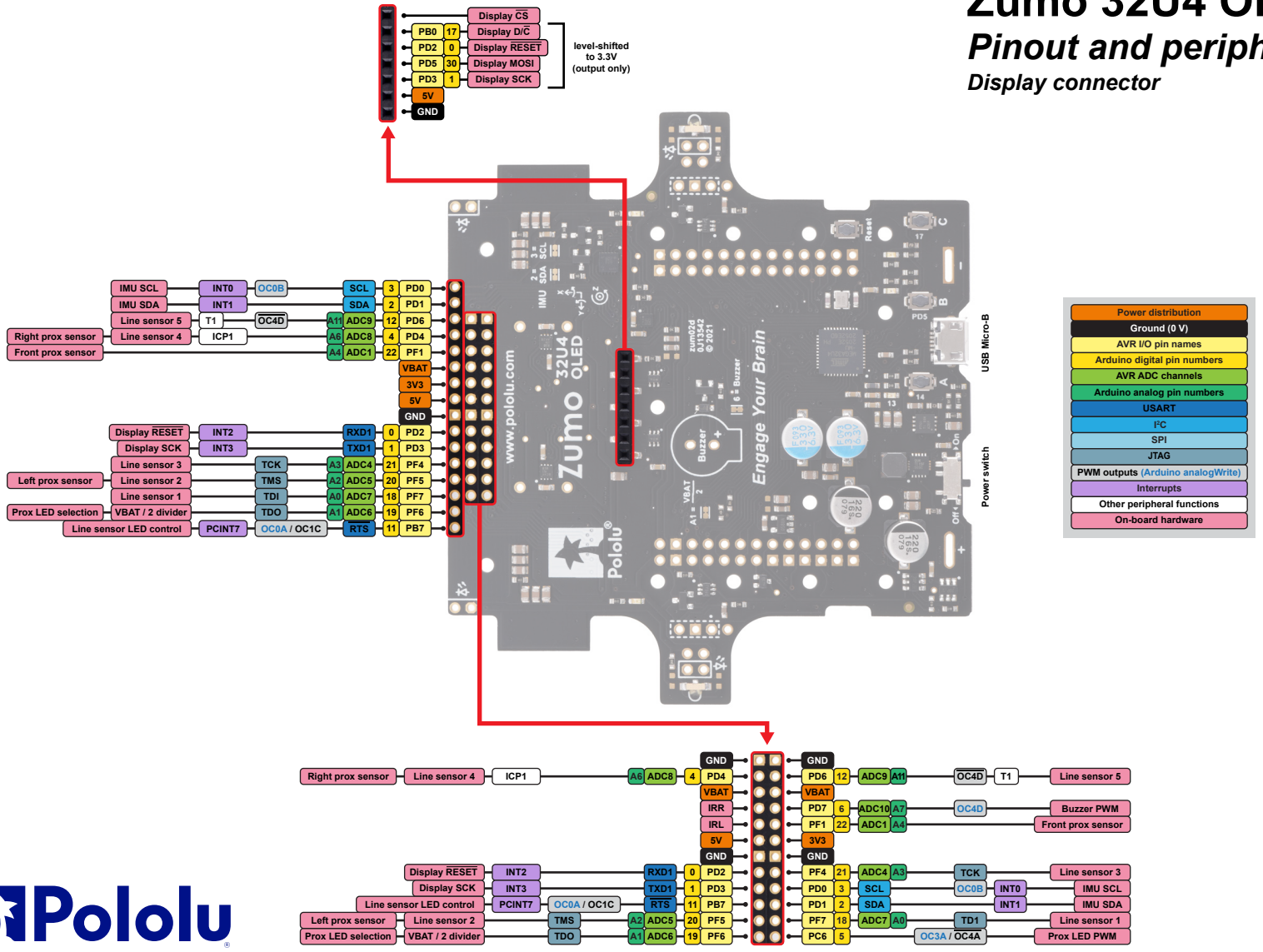
Display connector