CP2102N USB-to-Serial Adapter Carrier

© 2020 Pololu Corporation
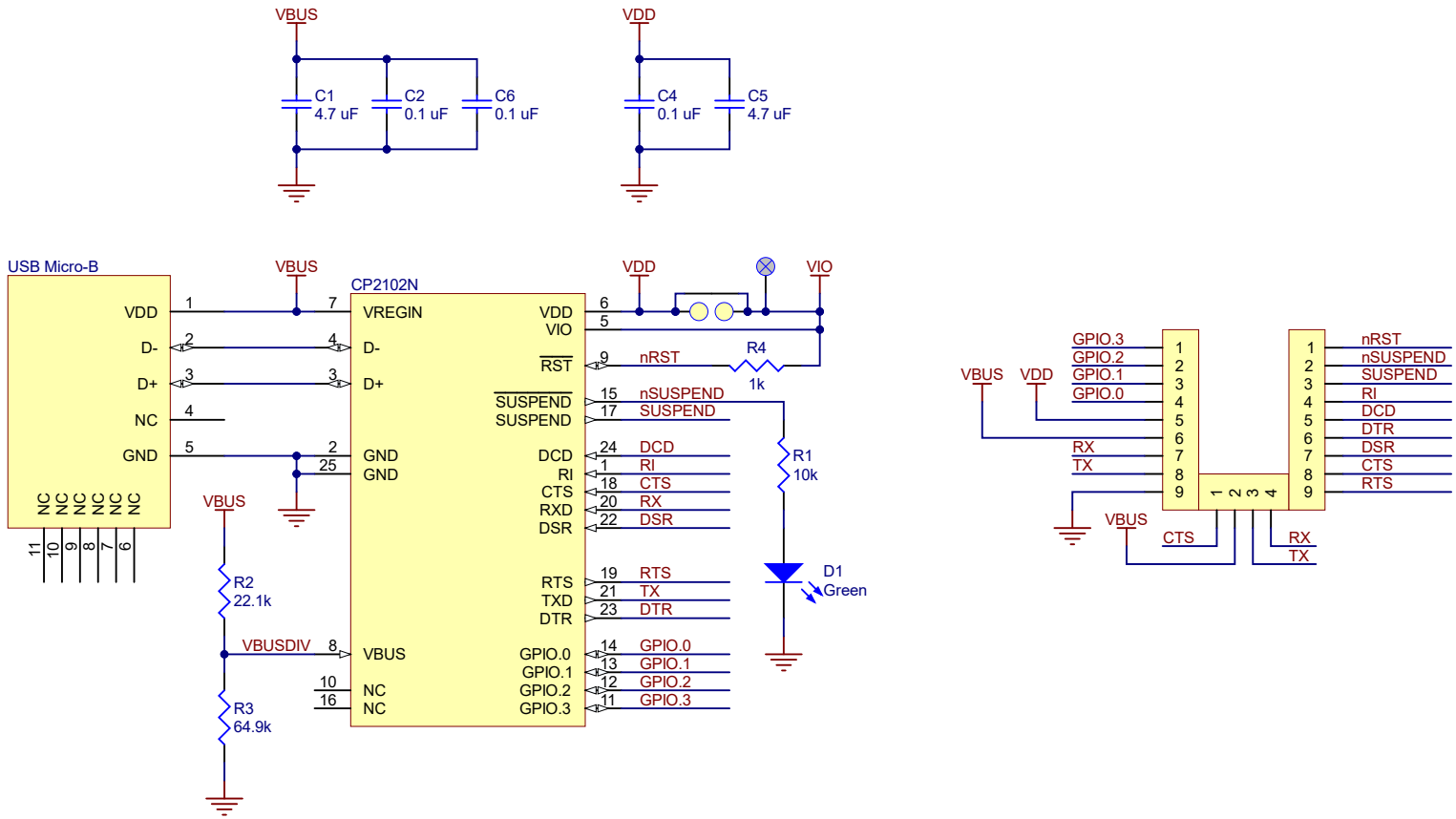
www.pololu.com