TB67S128FTG Stepper Motor Driver Carrier

©2019 Pololu Corporation

www.pololu.com
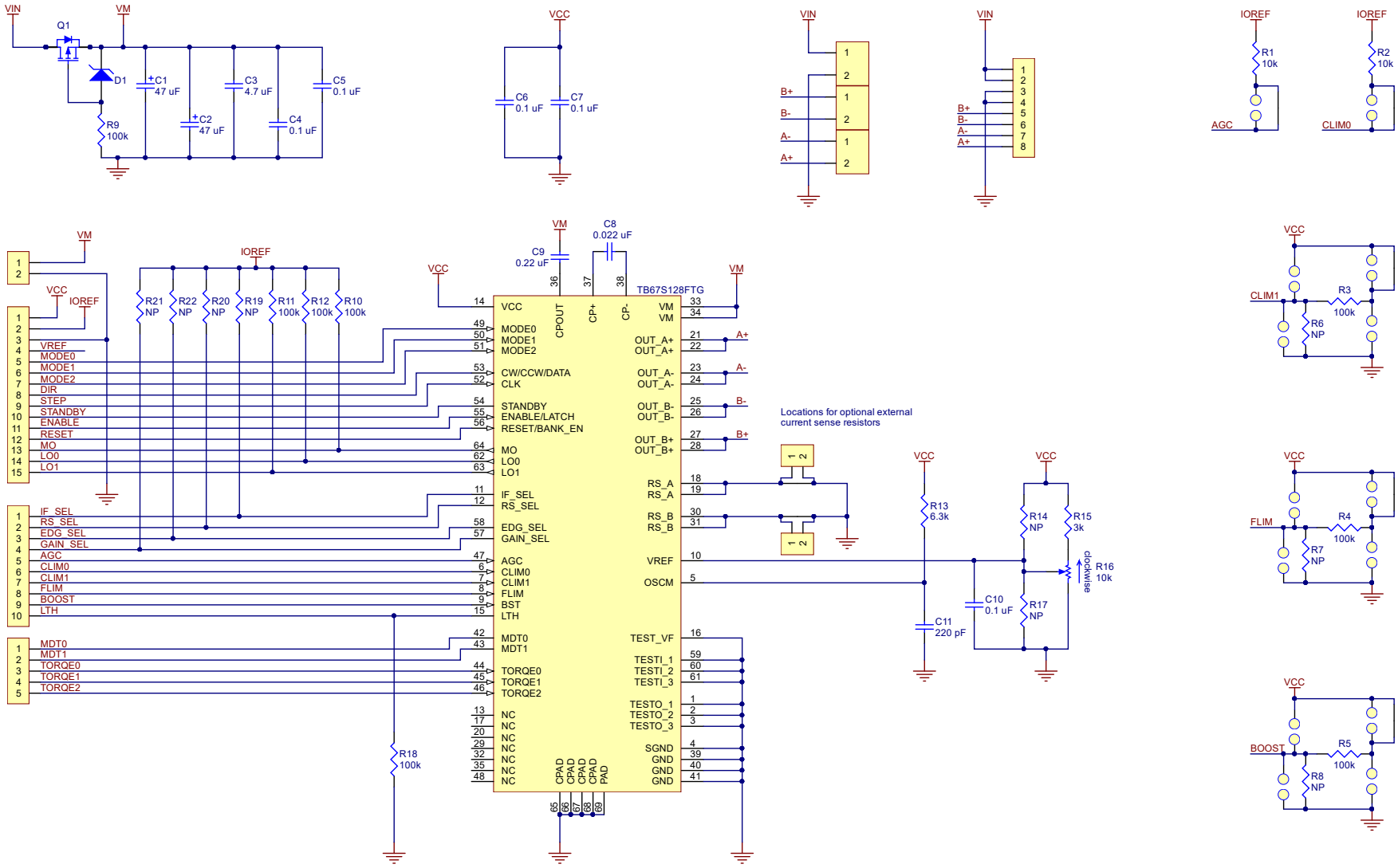
Schematic diagram