Dual TB9051FTG Motor Driver Shield for Arduino

©2018 Pololu Corporation
www.pololu.com

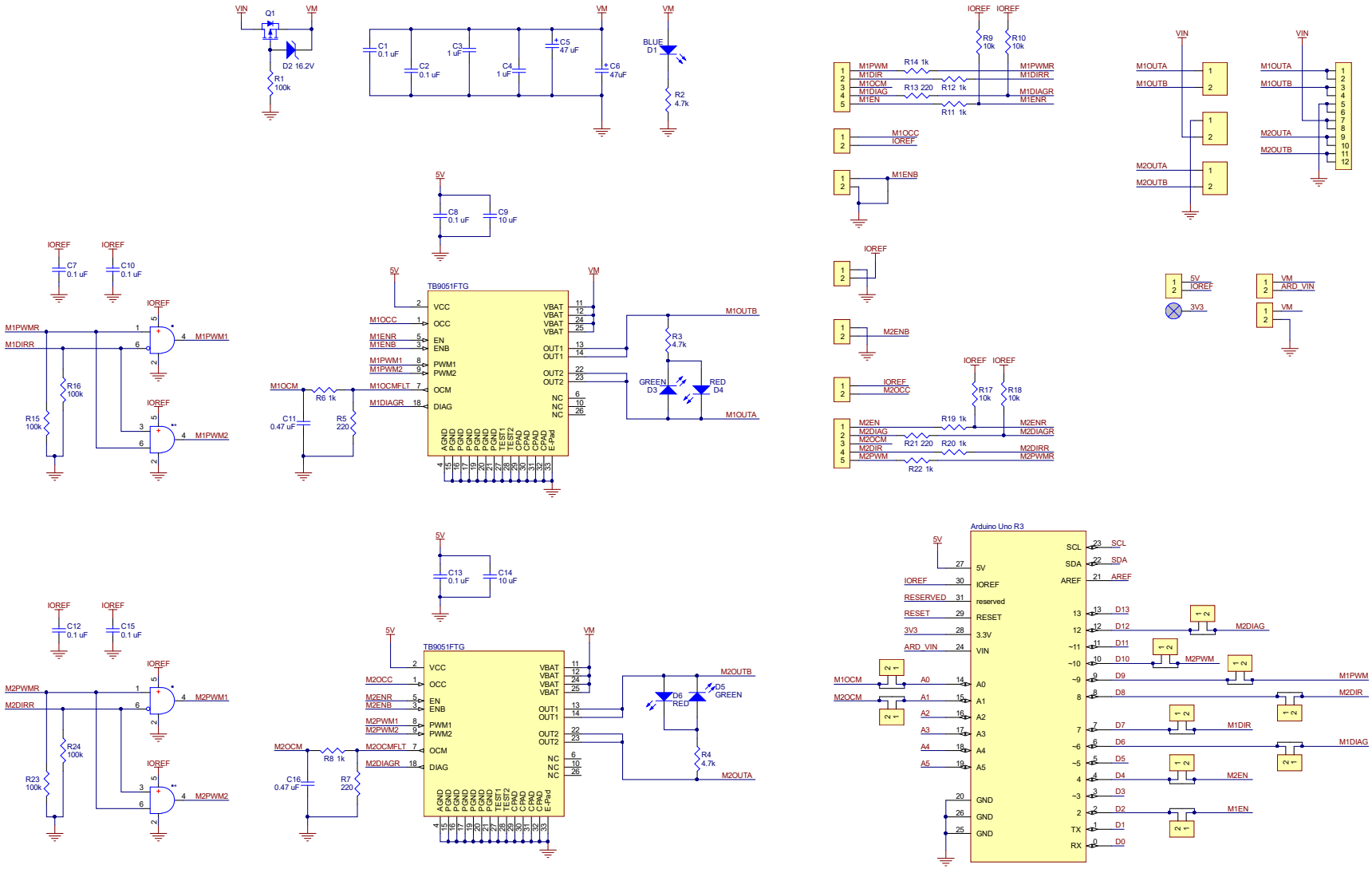

*Implemented as 74LVC1G97 multi-function gate with pin 3 tied to GND
**Implemented as 74LVC1G97 multi-function gate with pin 1 tied to GND