TB67S279FTG/TB67S249FTG Stepper Motor Driver Carrier

©2018 Pololu Corporation
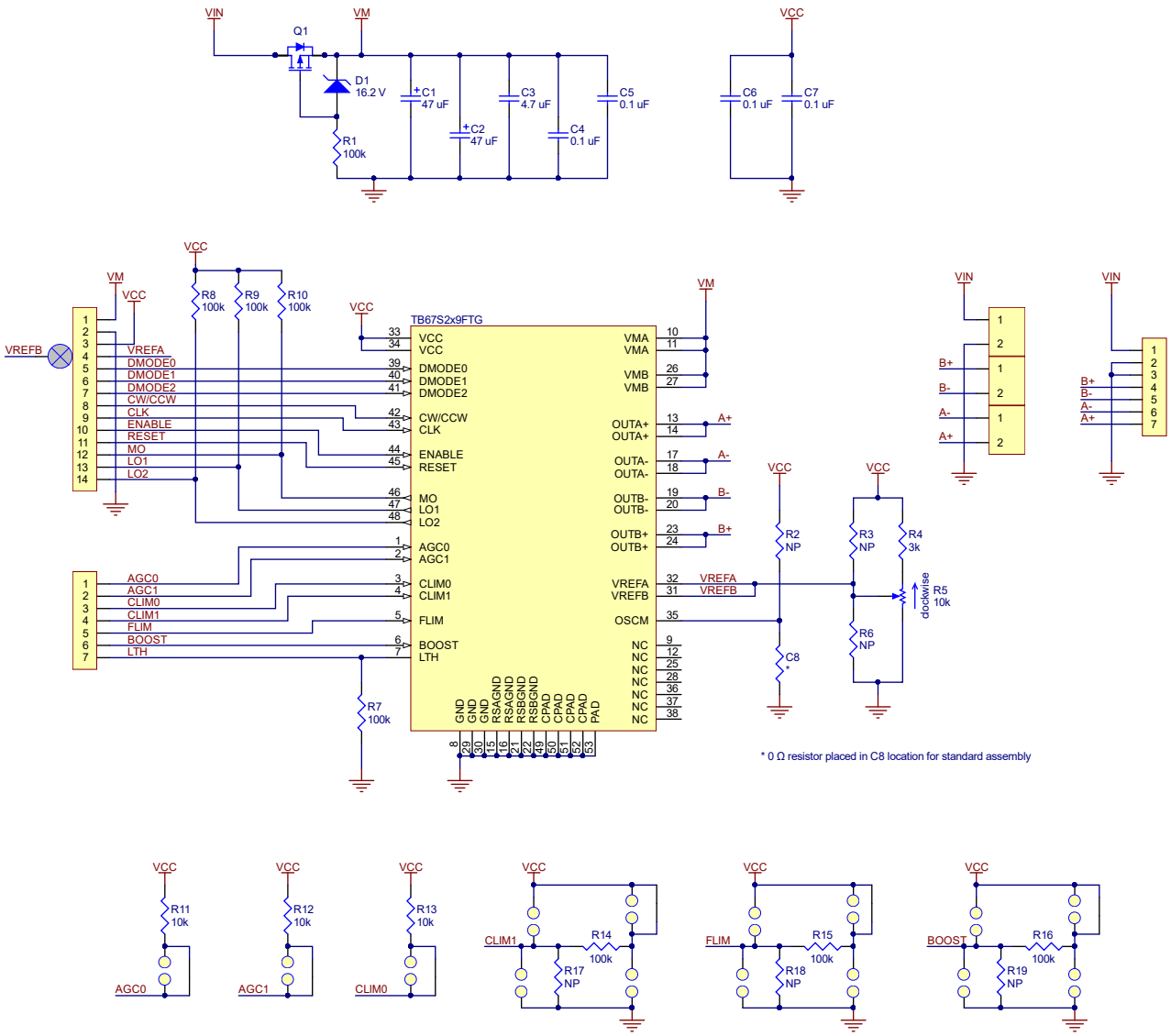
www.pololu.com