TB67H420FTG Dual/Single Motor Driver Carrier

©2018 Pololu Corporation

www.pololu.com

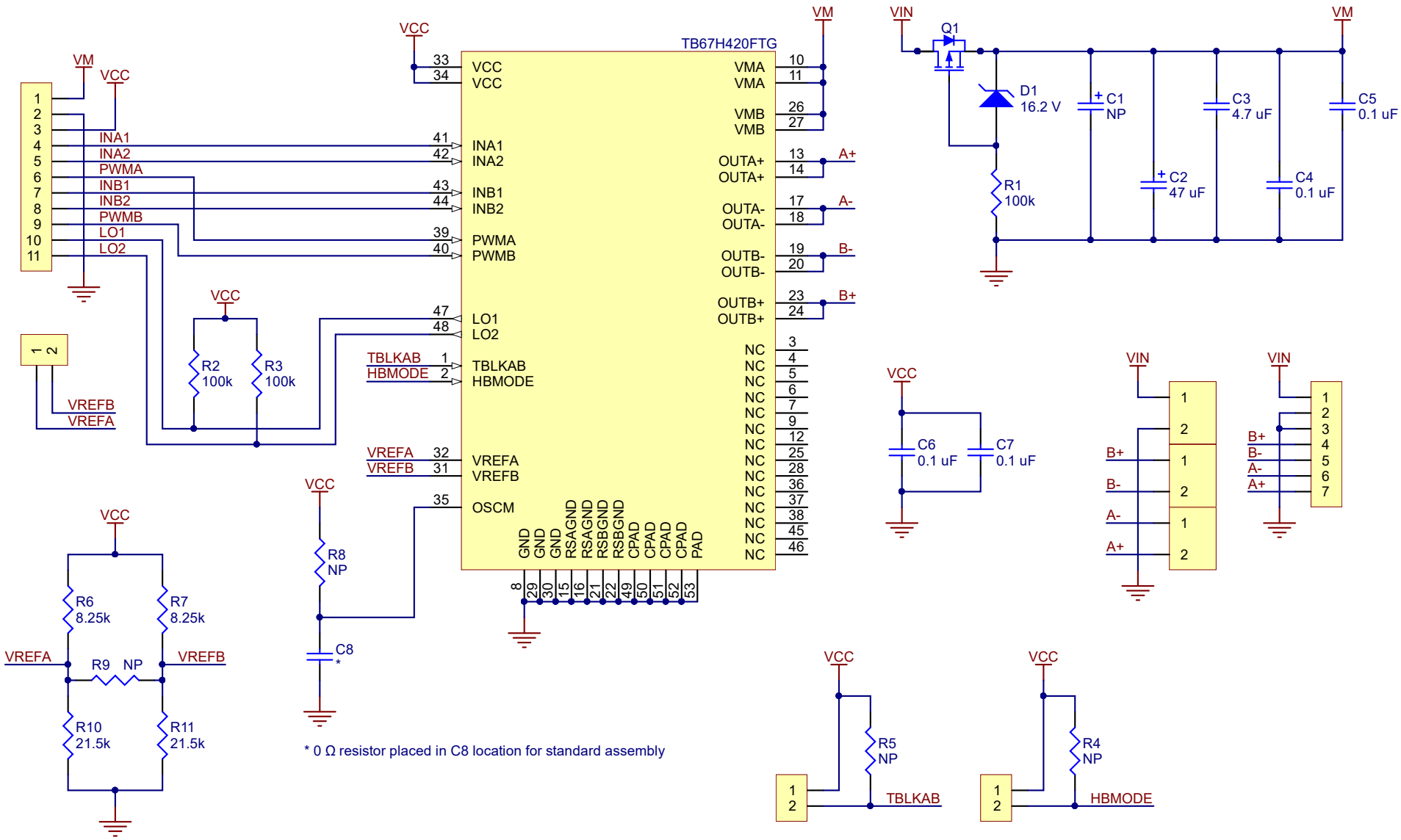

* 0 Ω resistor placed in C8 location for standard assembly