A-Star 328PB Micro
Pinout and Peripherals

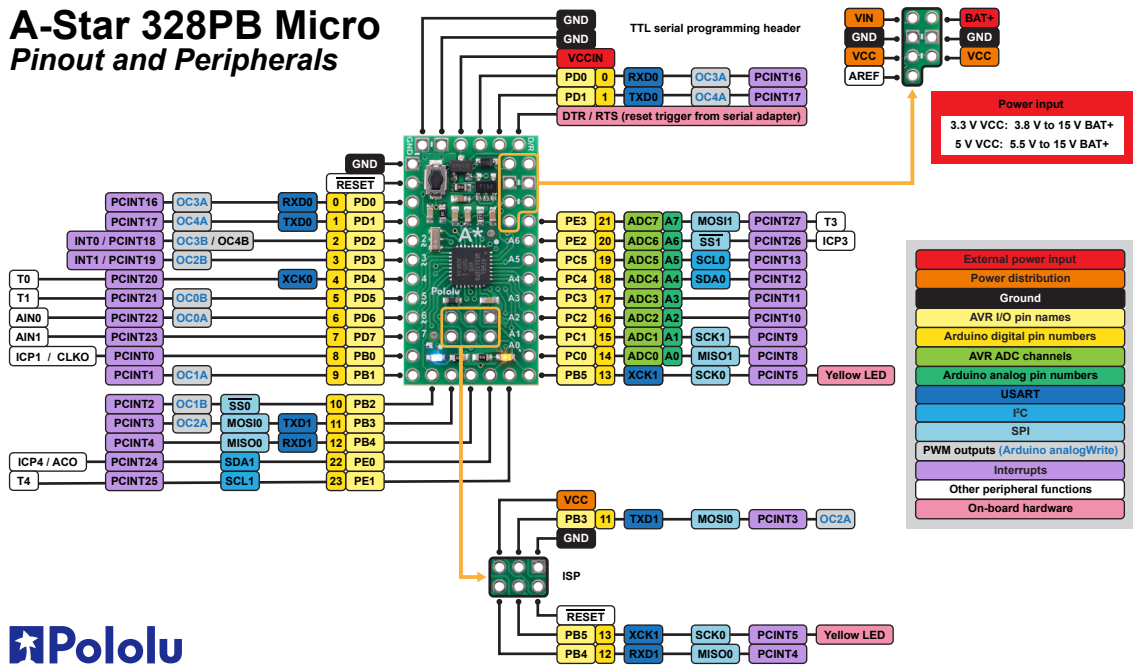

Pololu