MP6500 Stepper Motor Driver Carrier
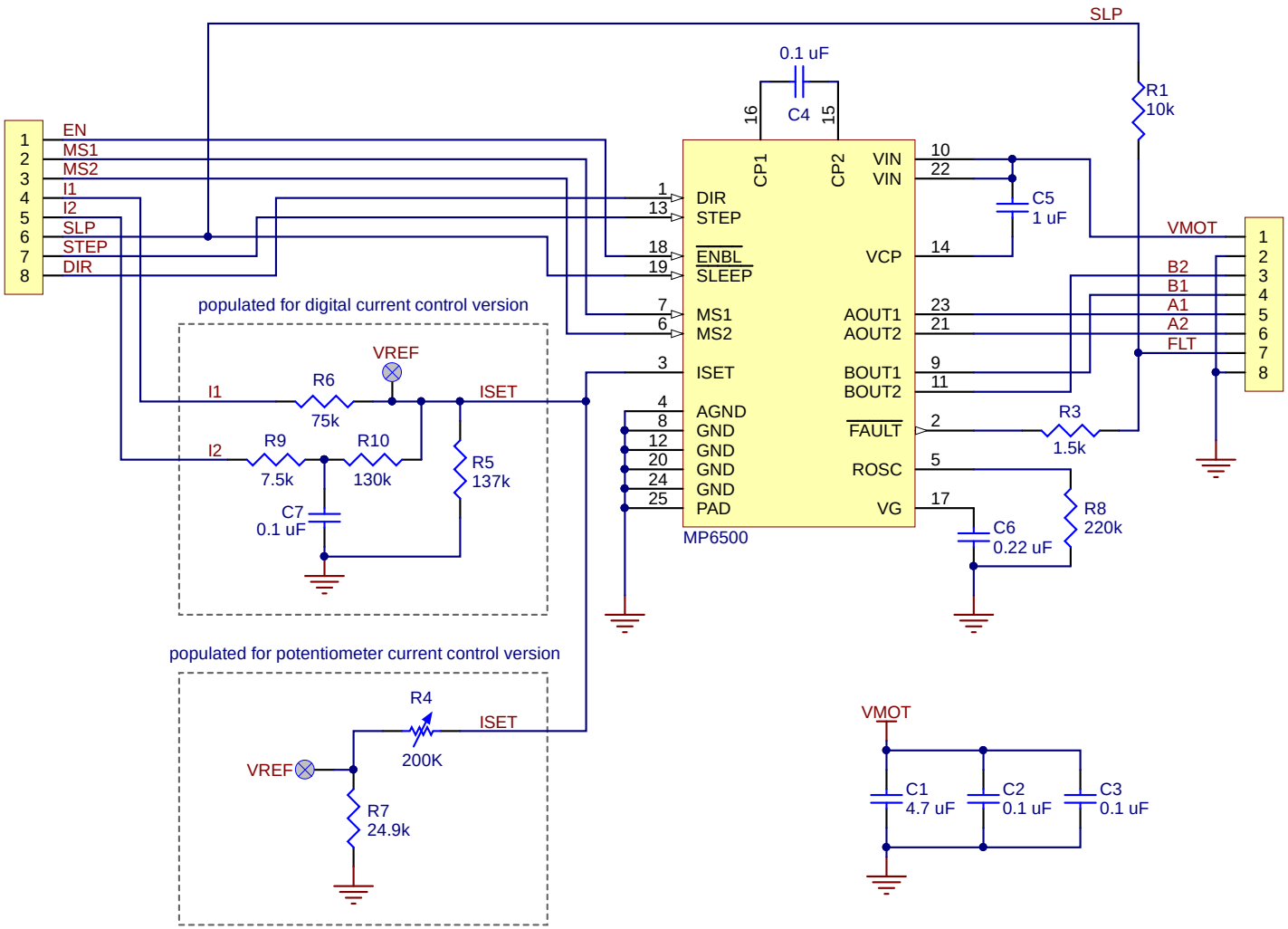
©2018 Pololu Corporation
www.pololu.com