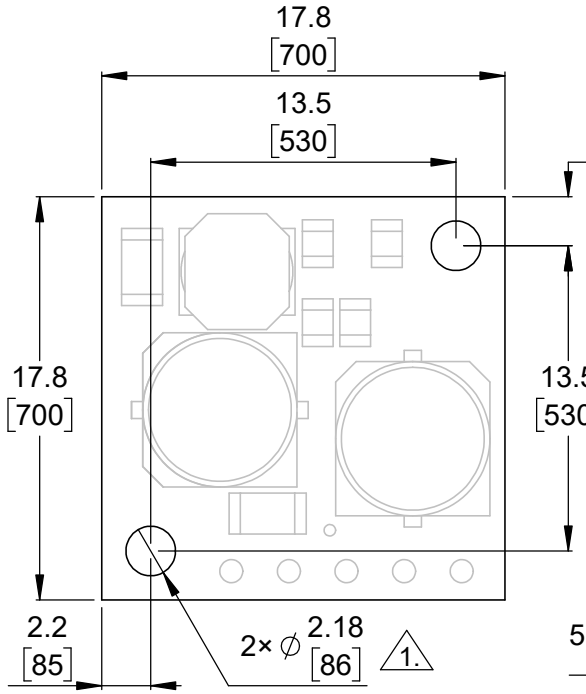

1 Board dimensions (top view)
Scale 3:1

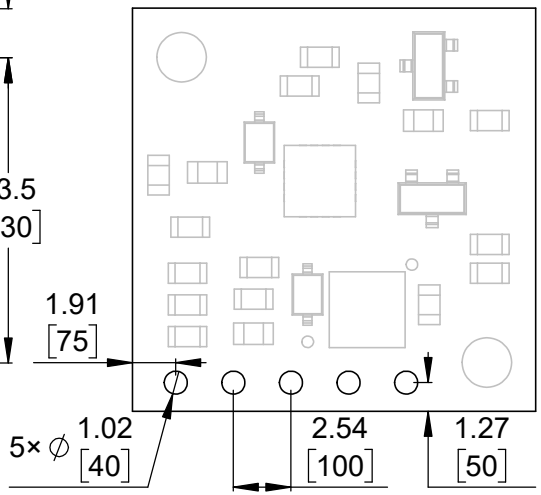

2 Connector callouts (bottom view)
Scale 3:1

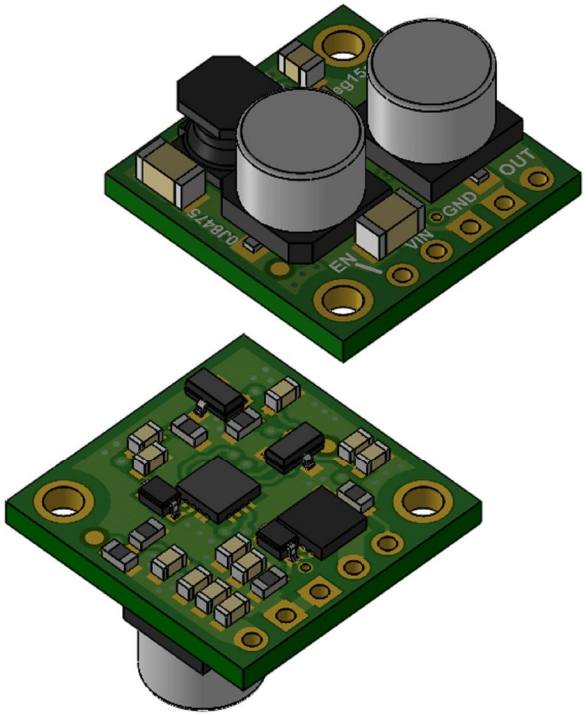

3 Isometric view
Scale 5:2

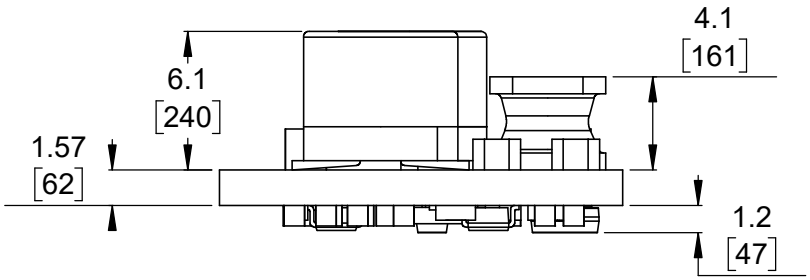

4 Profile
Scale 3:1

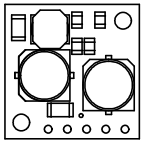

5 Actual size
Scale 1:1

1. Intended for #2-56 screws.
2. To get the specified scale, select 100% in print settings.
3. Drill location tolerance: ±0.1 [±5].
4. Board edge tolerance: ±0.3 [±10].

https://www.pololu.com/product/2849

Name: Pololu 2.5A Step-Down Voltage Regulator D24V25Fx	Item number: 2849, 2850, 2852-2854
Drawing date: 19 December 2017	Dev code: reg15a
Units: mm [mil]	Material: mixed

Pololu
Robotics & Electronics

© 2017 Pololu Corporation