VL53L7CX Time-of-Flight 8×8-Zone Wide FOV Distance Sensor Carrier

© 2023 Pololu Corporation
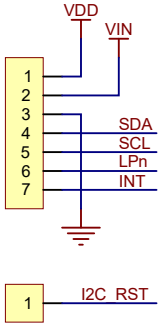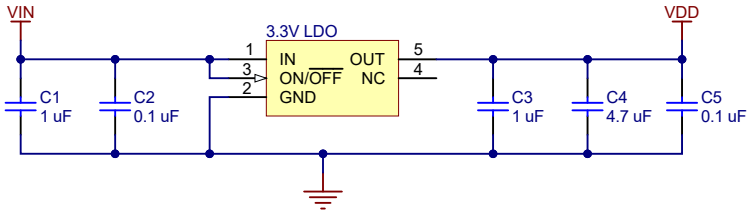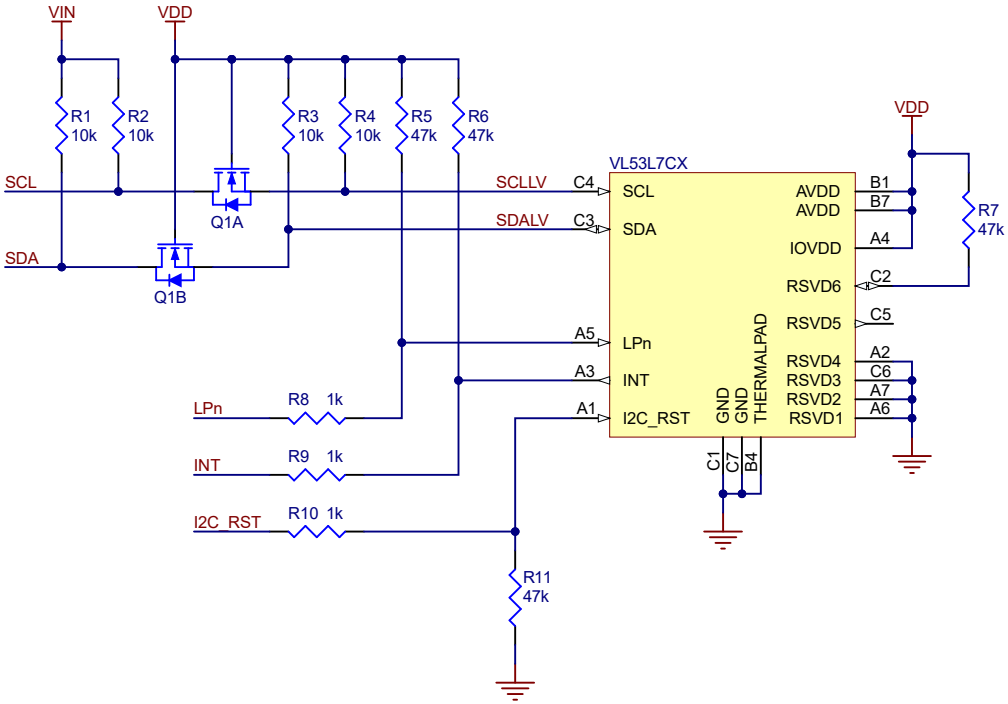
www.pololu.com